# Instructions for use

HOME DELUXE
WIR MACHEN DEIN ZUHAUSE

# TAIGA corrugated wooden lounger

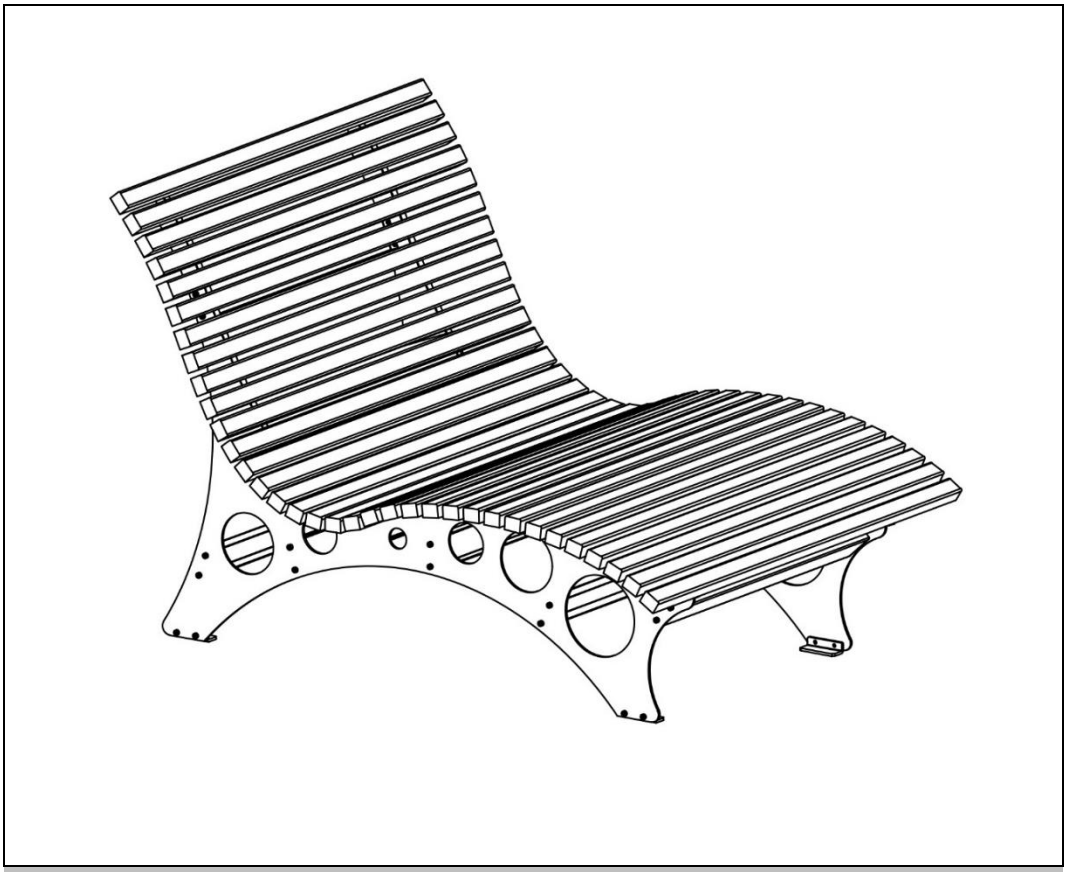

**Original instructions for use**

## Made in Germany

# IMPORTANT:
# KEEP FOR FUTURE REFERENCE.
# READ CAREFULLY!

## Table of contents


1. General information ... 3
1.1. Product overview ... 3
1.2. General notes ... 3
1.3. Guarantee ... 3
2. Information on the instructions for use ... 4
2.1. Availability of the instructions for use ... 4
2.2. Target groups of the instructions for use ... 4
2.3. Information on the translation ... 4
2.4. Explanation of symbols ... 4
2.5. General information on the instructions for use ... 4
2.6. Intended use ... 5
2.7. General safety instructions ... 5
3. Product features ... 6
3.1. Technical data ... 6
4. Scope of delivery ... 7
5. Assembly ... 9
5.1. Safety instructions ... 9
5.2. Structure of the product ... 9
5.3. Accessories ... 14
6. Application ... 14
6.1. Safety instructions ... 14
6.2. Initial commissioning ... 14
6.3. Operation ... 14
6.4. Storage location ... 14
7. Troubleshooting ... 15
8. Maintenance and care ... 15
8.1. Safety instructions ... 15
9. Dismantling ... 15

9.1. Safety instructions ..... 15
10. Waste disposal ..... 15
10.1. General information ..... 15

Dear customer,

Thank you for choosing a product from **Home Deluxe GmbH**. We hope you enjoy your new TAIGA wavy wood lounger.

The instructions for use support you in commissioning, operating and maintaining the product. The instructions for use and the safety instructions must be read carefully and in full. Observe these instructions to avoid hazards.

# 1. General information

## 1.1. Product overview

**Model**:
Wave wood lounger TAIGA| Item ID: 27912| Variant ID: 72684
Wave wood lounger TAIGA 120 cm| Item ID: 27912| Variant ID: 72685
Wave wood lounger TAIGA 150 cm| Item ID: 27912| Variant ID: 72686
Wave wood lounger TAIGA - Package 1 of 2| Item ID: 27904| Variant ID: 72676
TAIGA wavy wooden lounger - Package 2 of 2| Item ID: 27905| Variant ID: 72677
Wave wood lounger TAIGA 120 cm - Package 1 of 2| Item ID: 27907| Variant ID: 72679
Wave wood lounger TAIGA 120 cm - Package 2 of 2| Item ID: 27908| Variant ID: 72680

## 1.2. General notes

In order to fulfil our claim, we are constantly improving quality, simplifying operation and adapting the products to customer requirements. Due to these changes, the current version of the instructions for use can be found on our homepage.

The term "product" is in the instructions for use for the "TAIGA" corrugated wooden lounger.

## 1.3. Guarantee

The statutory liability for defects and warranty rights apply from the date of purchase.
Home Deluxe GmbH accepts no liability for damage caused by non-compliance with the instructions for use. Complaints arising from improper use are excluded from the warranty. In the event of defects in the product, please contact our customer service in writing using the contact form on our homepage, stating the product name, serial number and a photo of the type plate:

**Home Deluxe GmbH**
**Schanzeweg 2**
**32312 Lübbecke**
**Germany**
**Tel: +49 (0)5743 6181-0**
**www.home-deluxe-gmbh.de**

If you have any further questions, please contact our customer service team using the contact form.

# 2. Information on the instructions for use

## 2.1. Availability of the instructions for use

The instructions for use are part of the product and should be kept complete and in the immediate vicinity of the product.

## 2.2. Target groups of the instructions for use

The instructions for use must be read and observed by every person involved in one of the following activities or uses:

- Unpacking
- Assembly / Installation
- Commissioning / Operation
- Maintenance / inspection / care
- Troubleshooting / repair
- Waste disposal

## 2.3. Information on the translation

The original instructions for use were written in German. Any other language available is a translation of the German version.

## 2.4. Explanation of symbols

| Symbol | Explanation of symbols |
|---|---|
|  | **WARNING**<br>The symbol indicates possible dangers that could result in fatal or serious injuries. Before carrying out the corresponding installation or application step, read the corresponding note. |
|  | **INFO**<br>The symbol provides important information and indicates material damage. Observe these before carrying out the corresponding installation or application step in order to understand problems and avoid damage. |
|  | **Read instructions for use**<br>The symbol indicates that the operating instructions must be read carefully before mounting/installing and/or operating the appliance. |

## 2.5. General information on the instructions for use

The instructions for use refer to the TAIGA waved wooden lounger. It contains important information on operation, maintenance and cleaning. The instructions for use, in particular the safety instructions, must be read carefully before using the product; keep the instructions for use in a safe place. Only use the product as described in these instructions for use to prevent accidental injury or damage. If you pass the product on to third parties, these instructions for use must also be handed over.

## 2.6. Intended use

The product is of high quality, durable and intended or suitable exclusively for private use to a reasonable and customary extent. Furthermore, our product is **not** intended for commercial use. The product is intended exclusively as a garden lounger for 2 persons.
Only use the product as described in these instructions for use. Any other use is considered improper and may result in damage to property or personal injury. The manufacturer accepts no liability for damage caused by improper or incorrect use.

## 2.7. General safety instructions

**General hazard warnings**



- Improper handling can lead to considerable personal injury and damage to property. For this reason, assembly, installation, commissioning, troubleshooting, maintenance and repair work may only be carried out by qualified persons.
- Ensure that all parts are undamaged. Damaged parts pose a risk of injury and can affect safety and function.
- **Only** install the product if the scope of delivery is complete and in perfect condition.
- Only place the product on a safe, level and firm surface.
- Do not make any changes to the product.
- Check the fastening at regular intervals.

**Danger for children**



- Keep children away from packaging materials. There is a risk of suffocation!
- Keep children away from the assembly site while the product is being assembled. The scope of delivery contains small parts that can be swallowed or cause serious injury.
- Children can injure themselves when playing with the product or when pulling up on the product
- Do not place the product directly or in the immediate vicinity of a play area.
- Explain to the children how to use the product correctly and never leave them unsupervised while playing.
- Make sure that small children do not put small parts in their mouths.

**Risk of injury**
**Improper handling of the product can lead to injuries**



- Check the product for visible damage before each use.
- Do not make any design changes to the product. Any modifications must be authorised in writing by the manufacturer and carried out in accordance with the instructions.
- If the product is damaged, it must no longer be used.
- Ensure that the product is permanently installed securely to avoid injury.
- Do not climb onto the product as there is a risk of falling and tipping over.

**Risk of damage**

- Improper handling of the product can lead to damage.
- Do not open the packaging with sharp objects (e.g. knives, scissors or similar) as this may damage the product. Be careful when opening.
- Do not use the product near sources of heat or naked flames.

# 3. Product features

## 3.1. Technical data

| **TAIGA 120 cm** | |
|---|---|
| Dimensions (W x D x H) | 120 x 157 x 114 cm |
| Weight | approx. 88 kg |
| Material wood | Larch wood |
| Material side panel | Powder-coated steel |

| **TAIGA 150 cm** | |
|---|---|
| Dimensions (W x D x H) | 150 x 157 x 114 cm |
| Weight | approx. 90 kg |
| Material wood | Larch wood |

**Dimensioned drawing**

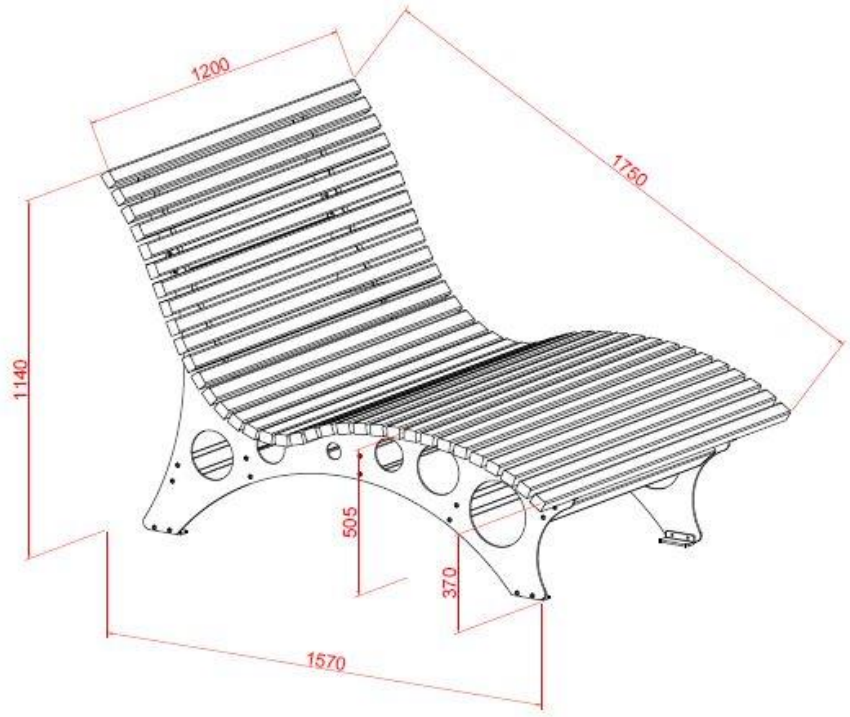

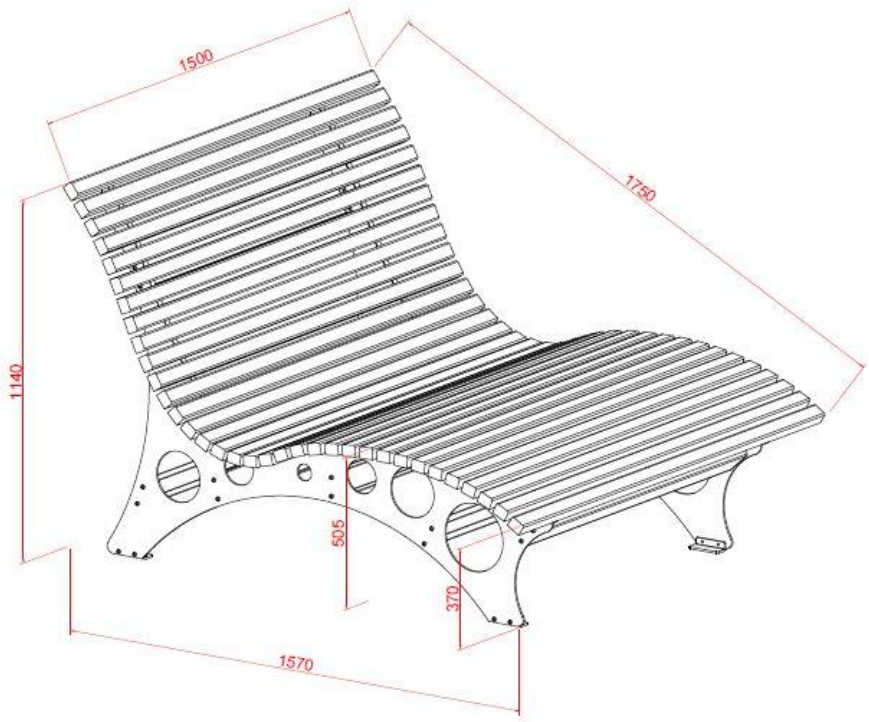


All dimensions in mm

## 4. Scope of delivery

Check the packaging for external damage on delivery. Furthermore, immediately after unpacking, check that the scope of delivery is complete and that the product and all components are in perfect condition. Only assemble the product if the scope of delivery is complete and undamaged.

**Components/Parts Corrugated wooden lounger TAIGA 120 cm**

| No. | Description of the | Quantity | Pictures |
|---|---|---|---|
| **1** | Side panel A | 1 | 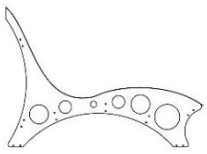 |
| **2** | Side panel B | 1 | 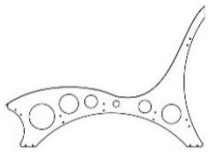 |
| **3** | Wooden slat | 34 | 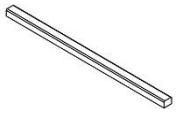 |
| **4** | Cross brace | 6 | 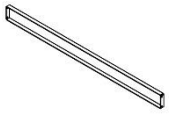 |

| No. | Description of the | Quantity | Pictures |
|---|---|---|---|
| **5** | Floor guide | 4 |  |
| **6** | Pan head screws (M8 x 20 mm) | 34 |  |
| **7** | Chipboard screws (4.5 x 25 mm) | 72 |  |

**Components/Parts Corrugated wooden lounger TAIGA 150 cm**

| No. | Description of the | Quantity | Pictures |
|---|---|---|---|
| **1** | Side panel A | 1 | 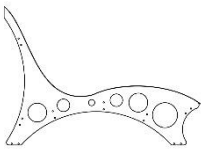 |
| **2** | Side panel B | 1 | 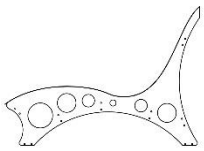 |
| **3** | Wooden slat | 34 | 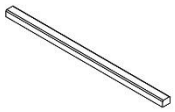 |
| **4** | Cross brace | 6 | 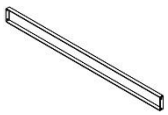 |
| **5** | Floor guide | 4 |  |
| **6** | Fillister head screw (M8 x 20 mm) | 34 |  |
| **7** | Chipboard screw (4.5 x 25 mm) | 72 |  |

# 5. Assembly

## 5.1. Safety instructions

- All health and safety information must be read.

**Risk of injury**

**Improper handling during installation can lead to injuries**

- Immediately after unpacking, check that the scope of delivery is complete and that the product and all parts are in perfect condition.
- **Only** install the product if the scope of delivery is complete and in perfect condition.
- Only place the product on a safe, level and firm surface.
- Always observe the mounting dimensions and use the mounting material supplied.
- Operating errors, assembly errors or damage caused by assembly are excluded from the warranty.
- Wear protective clothing such as safety shoes and protective gloves during assembly.

## 5.2. Structure of the product

The product is delivered disassembled and can be assembled with little effort. Follow the assembly instructions carefully. If the instructions are not followed, the function and safety of the product cannot be guaranteed.

**Tools required**

| | | | |
|---|---|---|---|
|  | Screwdriver | 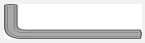 | Allen key |
| 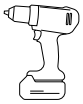 | Cordless screwdriver |  | Cutter knife |
|  | Twist drill |  | Hammer |
|  | Measuring tape | | |

- The following instructions must be read carefully.
- The fixing material for screwing the product to the substrate is **not** included.
- **ATTENTION:** The wooden slats **must** be treated with varnish or oil before or after assembly.
- Wood is a natural product. There may be knots or resin pockets in the wood. Please check the wooden slats visually and place the side with the resin pockets facing downwards if there are any. Before using the products, they should be treated with a varnish or oil.

- **Note:** Align the wooden slats sideways during assembly so that they are flush.

**Assembly steps 120 cm**

**Step 1**:
Screw the floor guide (**5**) to the two side panels A, B (**1, 2**) using the pan-head screws (**6**) and tighten hand-tight.

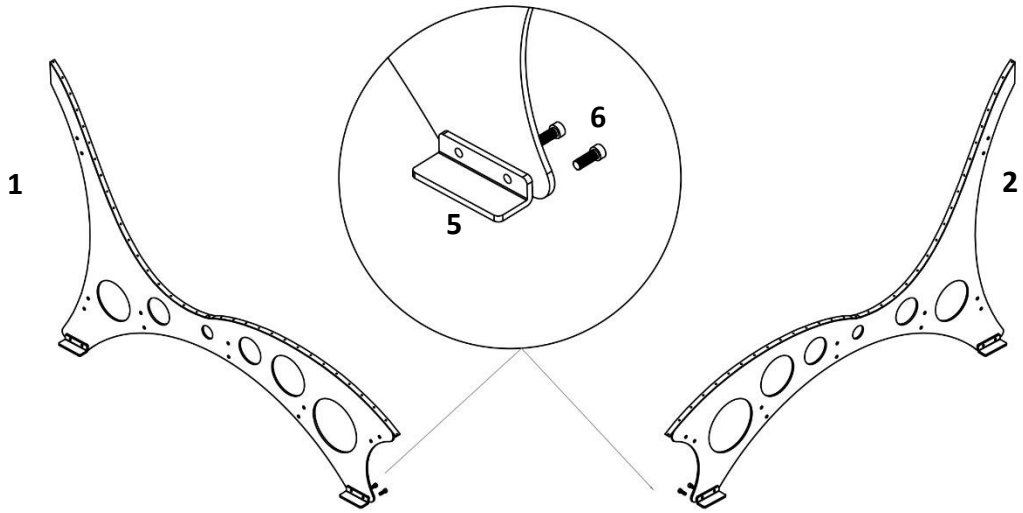


**Step 2:**
Screw the two side sections (**1, 2**) to the cross struts (**4**) and the pan-head screws (**6**) and tighten hand-tight.

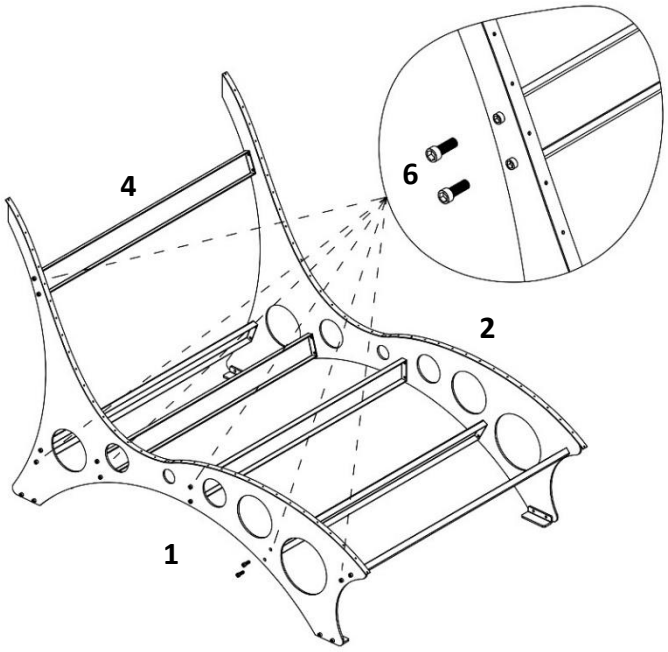

**Step 3:**
Simply place the wooden slats **(3**) on the frame and screw them to the back using the chipboard screws (**7**). Screw the wooden slats (**3**) firmly to the side parts (**1, 2**) of the back surface.

Tilt the lounger onto its back so that the wooden slats can be screwed to the frame.
Tighten the screws.

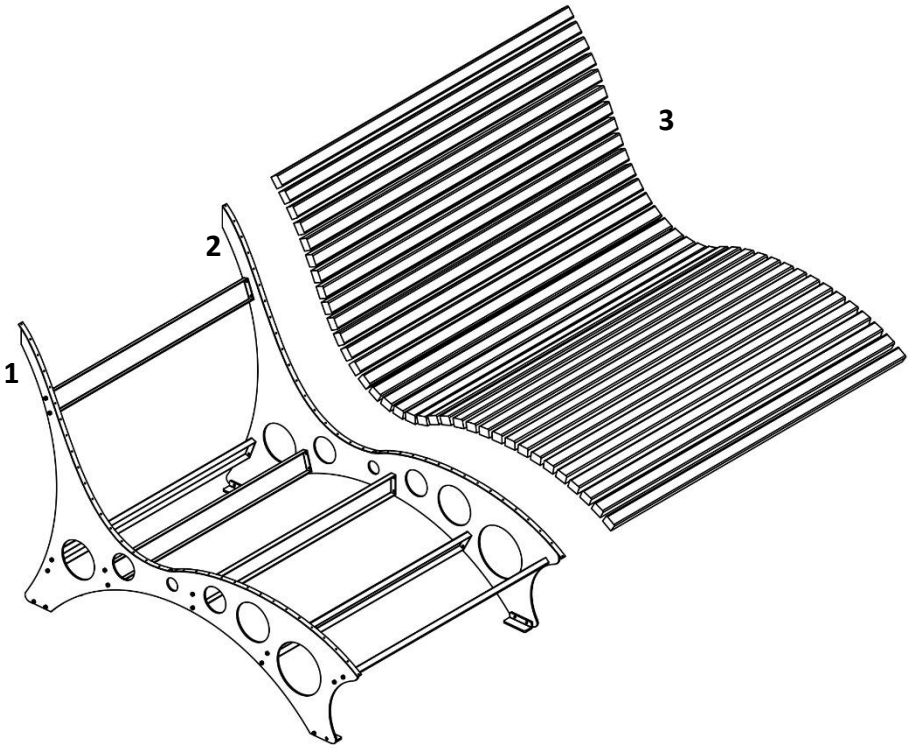


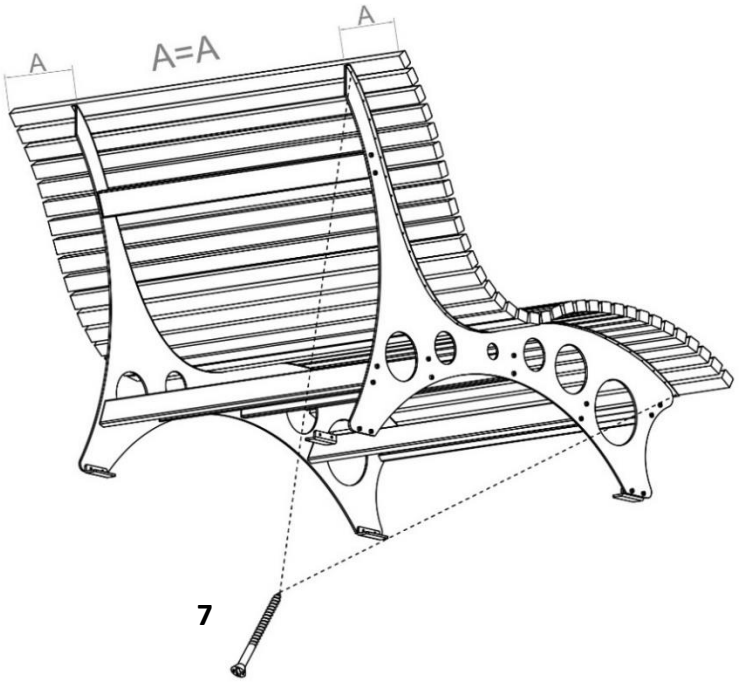

**Assembly steps 150 cm**

**Step 1**:
Screw the floor guide (**5**) to the two side panels A, B (**1, 2**) using the pan-head screws (**6**) and tighten hand-tight.

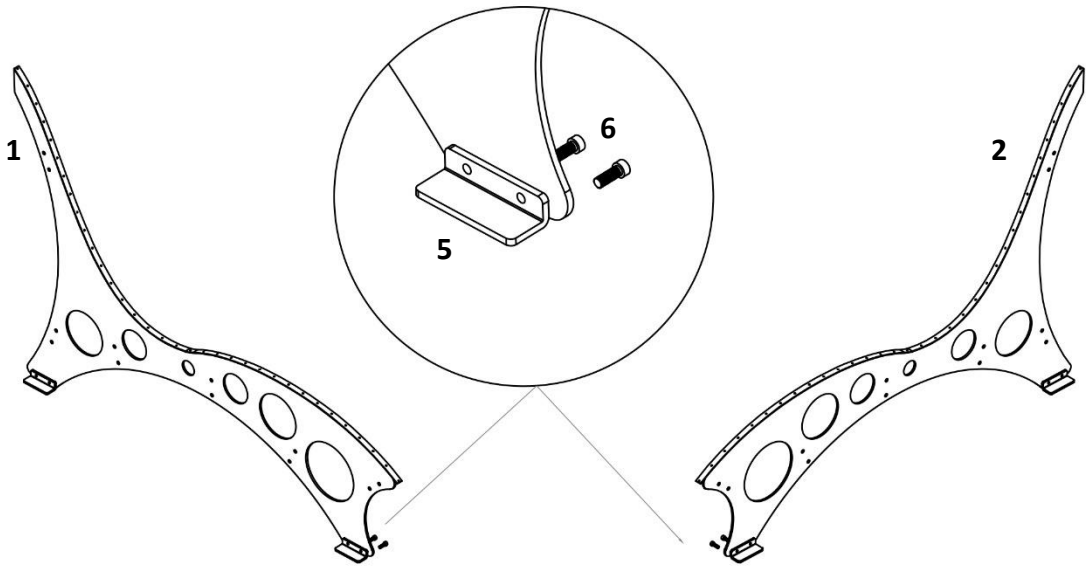


**Step 2:**
Screw the two side sections (**1, 2**) to the cross struts (**4**) and the pan-head screws (**6**) and tighten hand-tight.

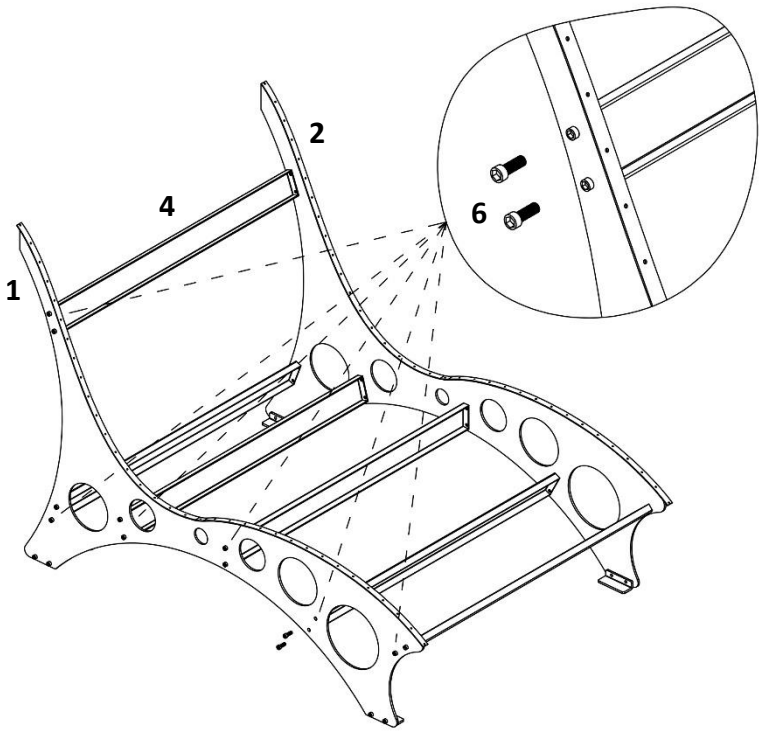

**Step 3:**
Simply place the wooden slats **(3**) on the frame and screw them to the back using the chipboard screws (**7**). Screw the wooden slats (**3**) firmly to the side parts (**1, 2**) of the back surface.

Tilt the lounger onto its back so that the wooden slats can be screwed to the frame.

Tighten the screws

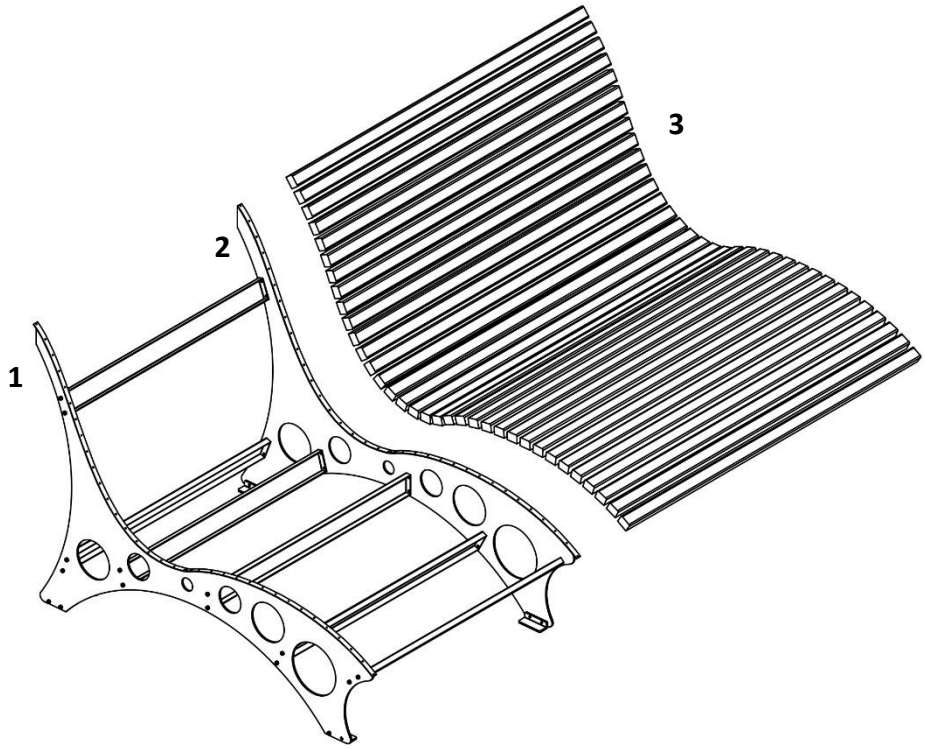


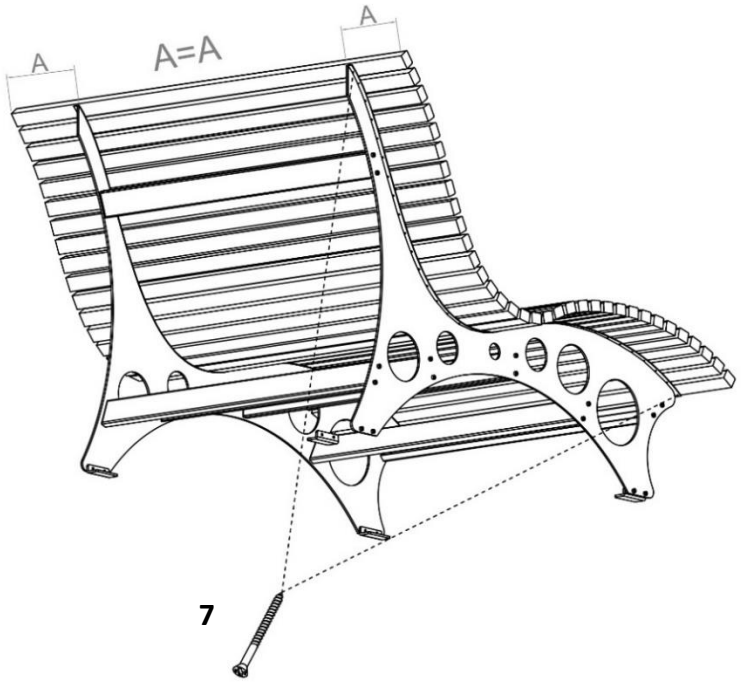

**Wood properties**



Resin galls are cavities filled with resin in tree trunks of resin-rich wood species (e.g. spruce, pine, larch). If these cavities are opened during processing of the wood by sawing or planing, the sticky resin leaks out. This can be easily wiped off with a cloth soaked in acetone.

### 5.3. Accessories

Waved wood lounger cushion: Article ID: 19999 / Variant ID: 48664

Rain cover forest sofa CAPE: Item ID: 22309 / Variant ID: 57346

## 6. Application

### 6.1. Safety instructions

The following health and safety information must be read carefully.

**Risk of injury**
**Improper handling during operation can lead to injuries**



- Do not use a damaged product.
- Do not make any changes to the product.
- The product is not a children's toy, climbing wall or sports equipment. Children are not permitted to play with the product.
- Check the fastening at regular intervals.

### 6.2. Initial commissioning

Check the product for damage before using it for the first time. The product may only be used if it is undamaged.

### 6.3. Operation

Check before using the product,

- the proper condition.

### 6.4. Storage location



- During the winter season, store the product in a dry, well-ventilated place that is protected from the weather as far as possible.

# 7. Troubleshooting

If the following faults occur during operation, please check the following fault causes using the following table. If the fault cannot be rectified by the measures listed, take the product out of operation.

| Error | Possible cause | Solution |
|---|---|---|
| The product wobbles or vibrates | - The product stands on uneven surfaces<br>- The fastening screws have come loose<br>- The product is overloaded | - Place the product on a level surface<br>- Tighten the fastening screws<br>- Comply with load limits |

*If another problem occurs with the product, please contact us.*

# 8. Maintenance and care

## 8.1. Safety instructions

**Risk of injury**
**Improper handling during operation can lead to injuries**



- Clean the surfaces with a hand brush or light air pressure.

# 9. Dismantling

## 9.1. Safety instructions

**Risk of injury**
**Improper handling during disassembly can lead to injuries**



- Secure the product against falling before dismantling.
- Disassembly of the product must be carried out in reverse order to assembly. (**see chapter Assembly**)

# 10. Waste disposal

## 10.1. General information



- Dispose of the product and all components in accordance with local and country-specific regulations to prevent damage to the environment.
- Our packaging is made from environmentally friendly materials. They can be recycled and thus serve as valuable raw materials. Dispose of the packaging material (cardboard, dirty packaging, etc.) separately and professionally in accordance with the applicable national regulations.
- Contact the manufacturer if you are unsure about disposal.
- You can also obtain information on proper disposal from the local waste disposal centres.

**Home Deluxe GmbH**
**Schanzeweg 2**
**32312 Lübbecke**
**Germany**
Tel: +49 (0)5743 6181-0
www.home-deluxe-gmbh.de

ga-372-00-taiga_N
2025/01